Set-A

BRAC UNIVERSITY Inspiring Excellence	**BRAC University** **Department of Computer Science and Engineering** Semester: **Fall 2025** Course Code: **CSE460** Course Title: **VLSI Design**	**Midterm Examination** Full Marks: **10 x 2 + 15 = 35** Time: **1 hour 20 minutes** Date: **22 November 2025**

Student ID:	**Name:**	**Section:**

[Answer all **THREE** questions. **Return** the question paper with the answer script.]

Question 1: [CO2]

You are tasked to design a circuit that determines the **parity** (even/odd) of **consecutive occurrences** of the sequence **"100"** in the input stream. The system has a single bit input w and two outputs z_1 and z_2. z_1 should be high if an **odd** number of '**100**'s are detected whereas z_2 should be high if an **even** number of '**100**' are detected **(consecutively)**. The table below shows a sample operation:

clk	t0	t1	t2	t3	t4	t5	t6	t7	t8	t9	t10	t11	t12	t13	t14	t15	t16	t17
w	0	0	**1**	**0**	**0**	0	0	**1**	**0**	**0**	**1**	**0**	**0**	0	**1**	**0**	**0**	0
z1	0	0	0	0	0	**1**	0	0	0	0	**1**	0	0	0	0	0	0	**1**
z2	0	0	0	0	0	0	0	0	0	0	0	0	0	**1**	0	0	0	0

Before t13, '100' appeared twice in a row, making z_2=1.

(a)	**Design** the **state diagram** for the corresponding FSM. How many **Flip-Flips** are required to implement in a circuit?	[5]
(b)	**Derive** the State Assigned Table using **Binary Encoding**.	[2]
(c)	**Find** the **Boolean expression** for the output logic using KMAP.	[3]

Question 2: [CO2]

Simon is developing a mechanism for his remote-controlled robot to automatically detect and respond to real fire incidents by activating a water-sprinkling system. The system integrates two sensors, a smoke detector and a heat sensor, to ensure reliable fire detection.

The ***smoke detector*** operates in an **active-low** configuration, where its output pin **(x)** becomes low (0) when the detected smoke concentration exceeds a defined threshold (100 ppm); otherwise, it remains high (1). Conversely, the ***heat sensor*** works in an **active-high** configuration, with its output pin **(y)** turning high (1) when the ambient temperature rises above a preset limit (50°C); otherwise, it remains low (0).

The water sprinkler system is activated only when the heat sensor detects a high temperature **for two consecutive** clock cycles, followed by the simultaneous detection of **both high temperature and high smoke concentration in the third cycle** at a particular location. This timing-based logic ensures accurate fire detection while minimizing false activations.

A summary of the operational logic is presented in the following table:

clk	t0	t1	t2	t3	t4	t5	t6	t7	t8	t9	t10	t11	t12	t13
x	0	1	0	0	0	0	1	0	0	0	0	1	0	0
y	1	1	1	1	0	0	0	1	1	0	1	1	1	0
z	0	0	**1**	**1**	0	0	0	0	0	0	0	0	**1**	0

(a)	**Determine** the type of FSM that would be needed for the given problem and design the state diagram for the corresponding FSM.	[2]
(b)	**Derive** the state-assigned table using the **Binary encoding** from your state diagram in (a).	[2]
(c)	**Find** the expression for the **next state** and the **output** for the FSM using KMAP.	[3]

Question 3: [CO1]

(a)	i)**Write** down the **truth table** and **output logic function** "Y" of a 4 to 1 mux whose input lines are I0, I1, I2, I3 and select pins are S1, S0. ii) **Implement** the mux logic function with Transmission gate. iii) **Compare** the number of transistors needed with the conventional **CMOS logic** design approach. (Assume all the input's inverted form are available.)	[2+2+1]
(b)	Suppose you have been given **negative level D latches**, system clock signal and input data signal. i) **Design** a negative edge **D flip-flop** showing the clock and data signal flow through the given **latch/latches**. (You need not show the circuit diagram inside latch.) ii) **Draw** the **output** of the latches for the clock and data signal shown below for your design in b(i). (Draw on the **question paper**.) 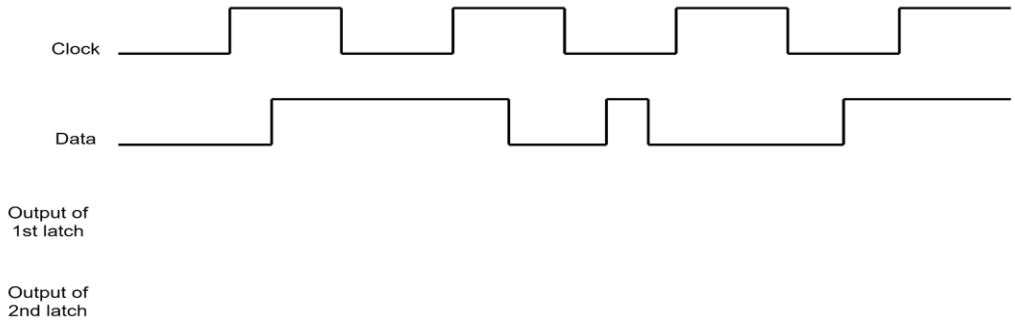 	[2+3]
(c)	**Find** the node voltages for the circuit shown in the figure below analyzing pass transistor DC characteristics for $V_x = 5V, V_y = 3V, V_z = 3V, Vdd = 5V$. Assume $V_{tn} = 0.5V$, $\lvert V_{tp} \rvert = 0.3V$. [M1,M3,M4,M7 are **NMOS** and M2,M5,M6 are **PMOS** pass transistor] 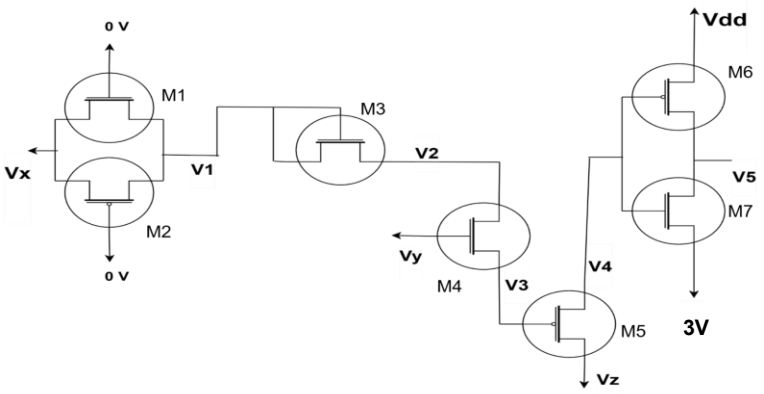 	[5]